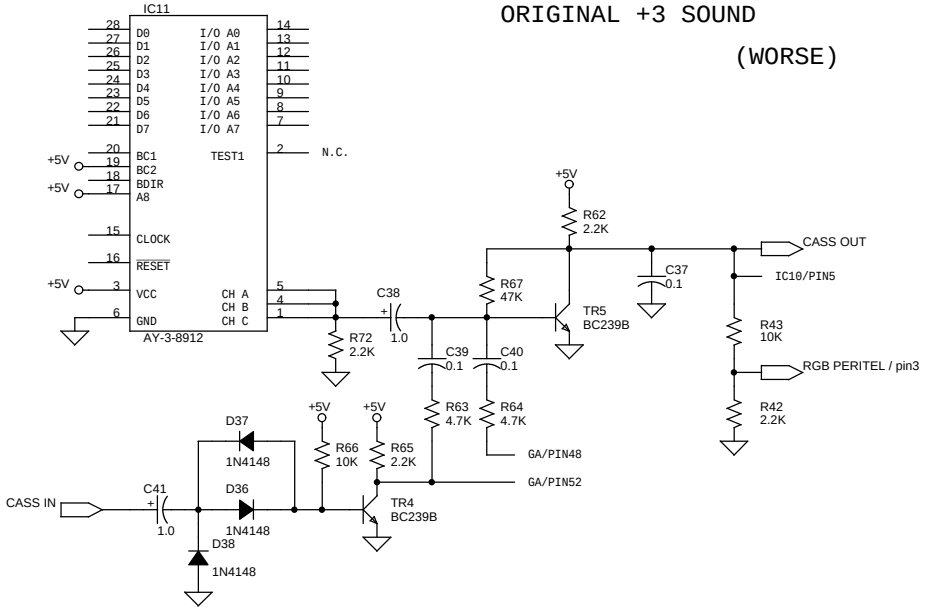

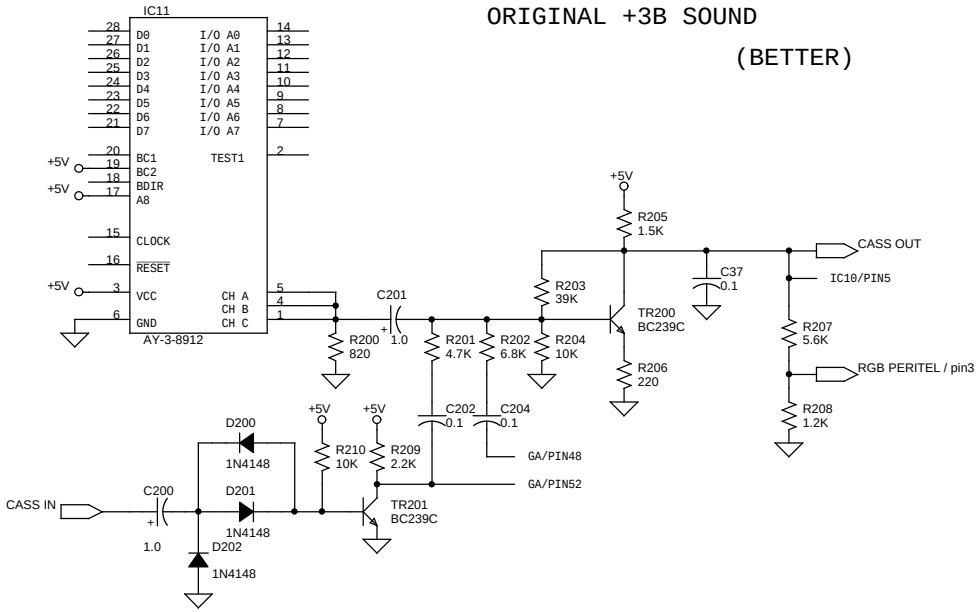

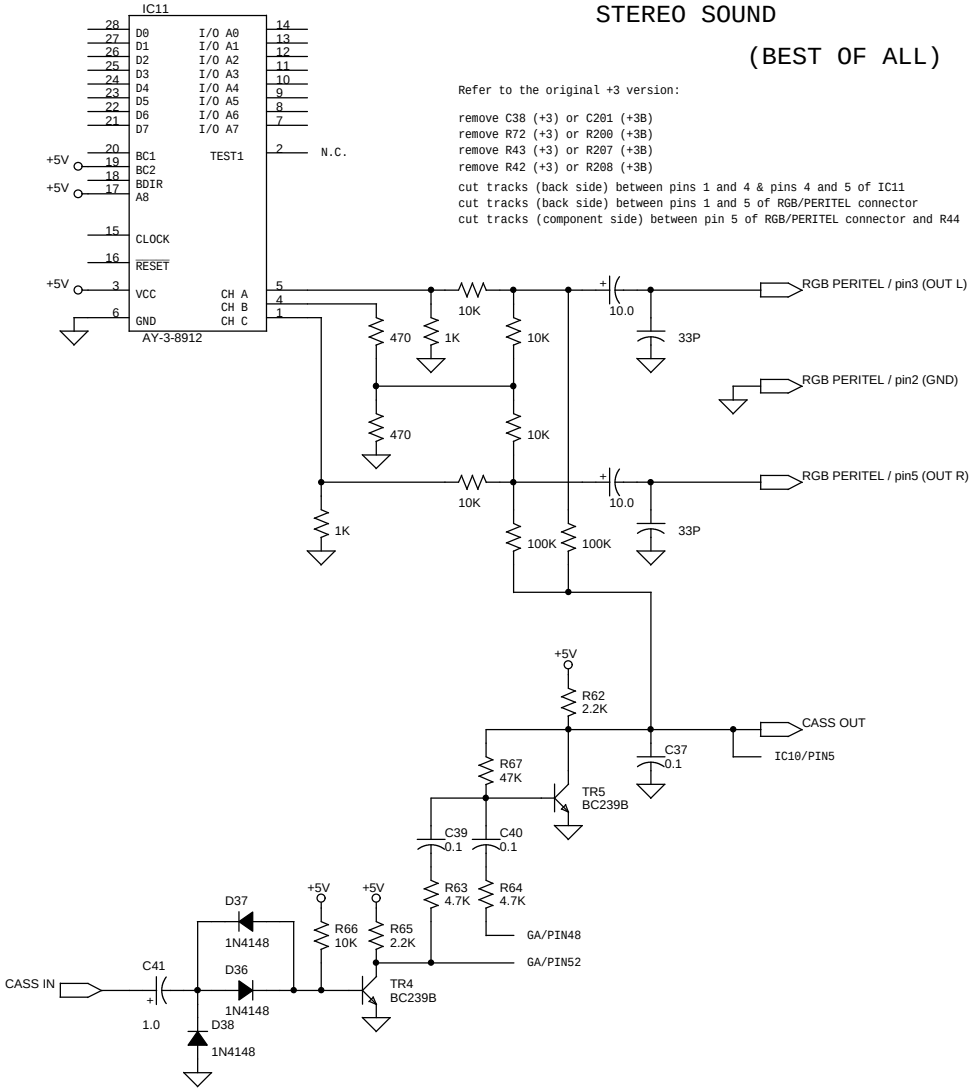

Unless otherwise noted:
all resistors are in ohms
all capacitors are in microfarads

(concept & drawing by Cristian Secara)

Title: ZX Spectrum +3 Sound (partial schematic)

Size: A3 | Document Number | Rev: 2.1

Date: Friday, December 31, 1999 | Sheet 1 of 1